XR5, XR5-MAX, XS5-MAX Pro Version

SET-UP SHEET

www.MCDRACING.com

MCD Racing

NAME:	
RACE:	DATE: ...../...../.....

TRACK

SIZE:	OPEN ☐	MEDIUM ☐	TIGHT ☐
TRACTION:	HIGH ☐	MEDIUM ☐	LOW ☐
SURFACE:	SMOOTH ☐	MEDIUM ☐	BUMPY ☐
TYPE:	HARD PACKED ☐	SOFT DIRT ☐	CLAY ☐
	BLUE GROOVE ☐	ASTRO TURF ☐	GRASS ☐
CONDITION:	DRY ☐	DUSTY ☐	WET ☐ MUD ☐
TEMPRATURE:	AIR:	TRACK:	

DIFFERENTIALS

FRONT			CENTER		REAR	
LSD	OPEN	OD	LSD	SOLID	LSD	OPEN
☐	☐	☐	☐	☐	☐	☐
LSD Ramp			LSD Ramp		LSD Ramp	
60° 90° 120°			60° 90° 120°		60° 90° 120°	
☐ ☐ ☐			☐ ☐ ☐		☐ ☐ ☐	

SHOCK SPRINGS

FRONT		REAR
☐	SOFT	☐
☐	MEDIUM	☐
☐	HARD	☐
	OTHER	

OIL VISCOSITY

FRONT | REAR

PISTON HOLE SIZES

FRONT | REAR

2x2mm ☐ ☐ 4x2mm ☐ ☐ 2x2mm ☐ ☐ 4x2mm ☐ ☐
3x2mm ☐ ☐ 5x2mm ☐ ☐ 3x2mm ☐ ☐ 5x2mm ☐ ☐

ACKERMAN

☐ LESS ☐ STANDARD

ANTI-ROLL BAR

FRONT ☐ THICKNESS ☐ REAR

CHASSIS | BODY

LONG ☐ SHORT ☐

NOTES

www.mcdracing.com/support

POSITION: BEST LAP:

FRONT

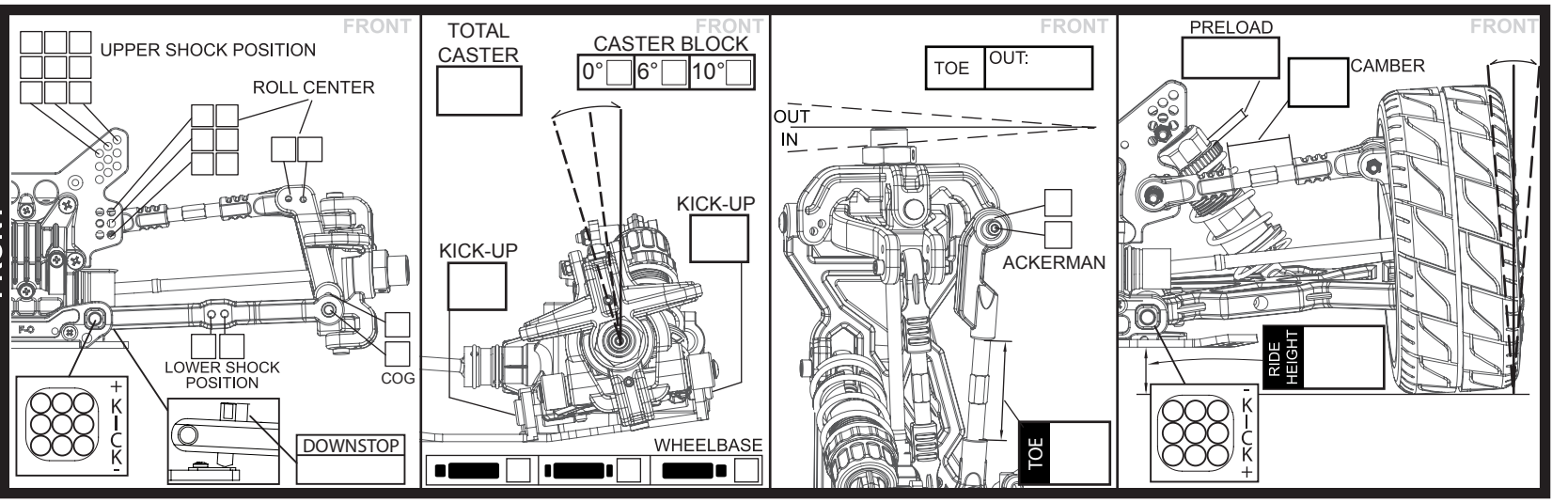

REAR

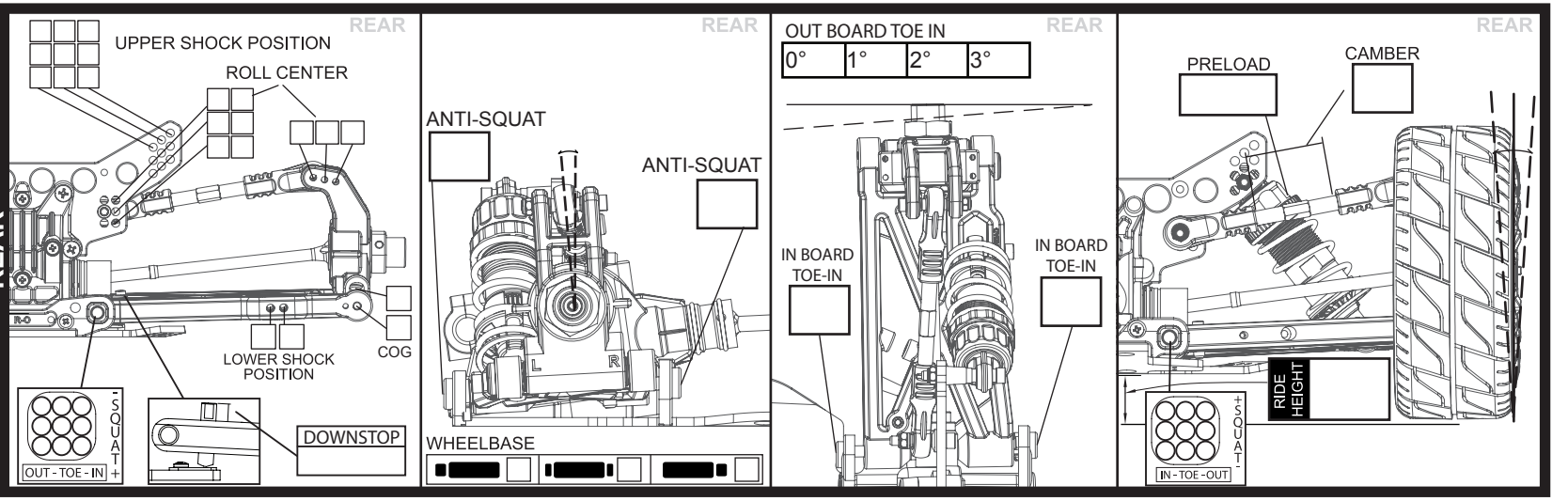

TYRES

COMPOUND	F		R	
INSERT	F		R	

POWER UNIT

ENGINE:

CARBURATOR:

H L

PLUG:

OIL:

CLUTCH:

PIPE:

TRANSMISSION RATIO

Center Diff	Engine	Final Ratio
60	26	6,92
60	25	7,20
62	25	7,44
60	24	7,50
62	24	7,75
60	23	7,83
63	24	7,88
62	23	8,09
60	22	8,18
63	23	8,22
64	23	8,35
62	22	8,45
63	22	8,59
64	22	8,73
62	21	8,86
65	22	8,86
63	21	9,00
64	21	9,14
65	21	9,29
62	20	9,30
63	20	9,45
64	20	9,60
65	20	9,75
63	19	9,95
64	19	10,11